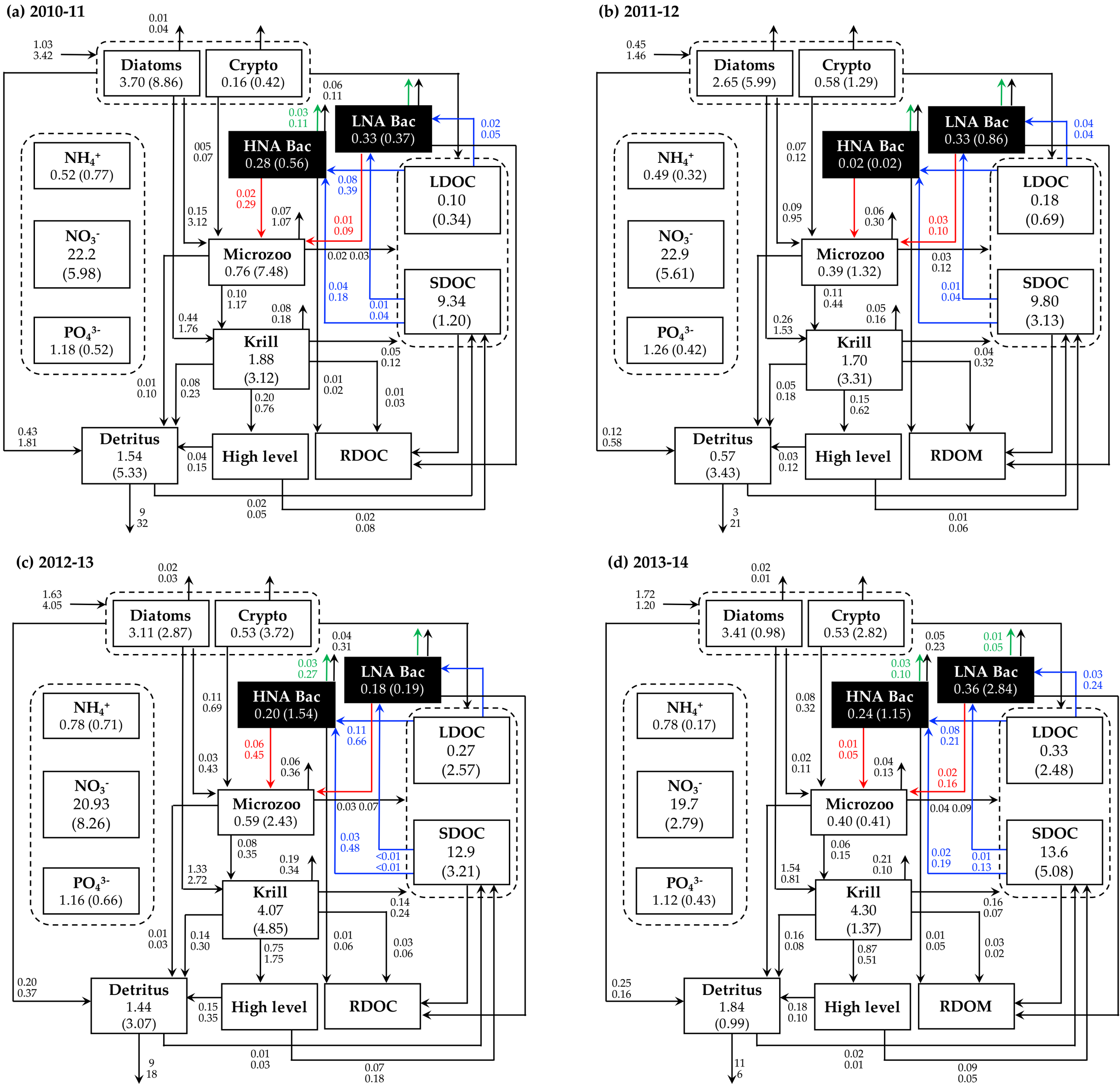
(a) 2010-11
Diatoms 3.70 (8.86)
Crypto 0.16 (0.42)
LNA Bac 0.33 (0.37)
HNA Bac 0.28 (0.56)
NH4+ 0.52 (0.77)
NO3- 22.2 (5.98)
PO43- 1.18 (0.52)
LDOC 0.10 (0.34)
SDOC 9.34 (1.20)
Microzoo 0.76 (7.48)
Krill 1.88 (3.12)
Detritus 1.54 (5.33)
High level
RDOC
(b) 2011-12
Diatoms 2.65 (5.99)
Crypto 0.58 (1.29)
LNA Bac 0.33 (0.86)
HNA Bac 0.02 (0.02)
NH4+ 0.49 (0.32)
NO3- 22.9 (5.61)
PO43- 1.26 (0.42)
LDOC 0.18 (0.69)
SDOC 9.80 (3.13)
Microzoo 0.39 (1.32)
Krill 1.70 (3.31)
Detritus 0.57 (3.43)
High level
RDOM
(c) 2012-13
Diatoms 3.11 (2.87)
Crypto 0.53 (3.72)
LNA Bac 0.18 (0.19)
HNA Bac 0.20 (1.54)
NH4+ 0.78 (0.71)
NO3- 20.93 (8.26)
PO43- 1.16 (0.66)
LDOC 0.27 (2.57)
SDOC 12.9 (3.21)
Microzoo 0.59 (2.43)
Krill 4.07 (4.85)
Detritus 1.44 (3.07)
High level
RDOC
(d) 2013-14
Diatoms 3.41 (0.98)
Crypto 0.53 (2.82)
LNA Bac 0.36 (2.84)
HNA Bac 0.24 (1.15)
NH4+ 0.78 (0.17)
NO3- 19.7 (2.79)
PO43- 1.12 (0.43)
LDOC 0.33 (2.48)
SDOC 13.6 (5.08)
Microzoo 0.40 (0.41)
Krill 4.30 (1.37)
Detritus 1.84 (0.99)
High level
RDOM